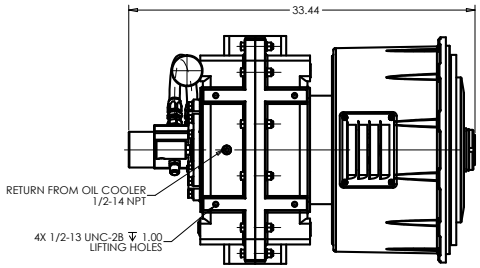

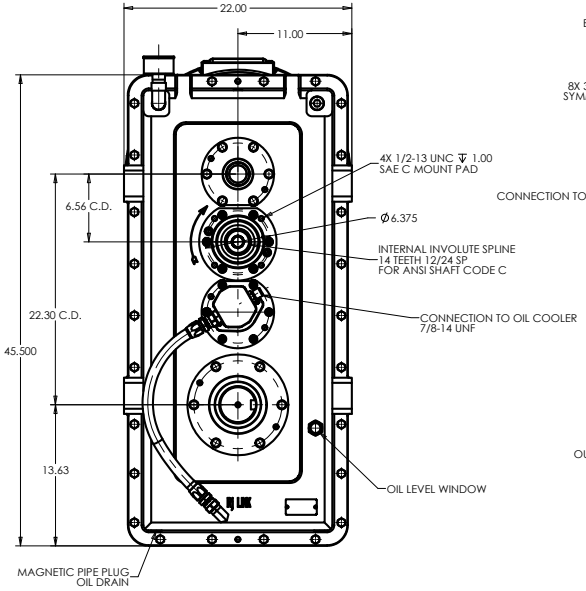

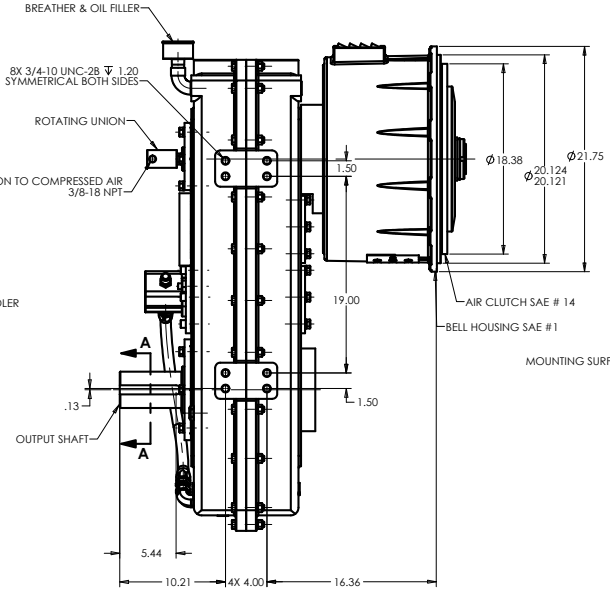

WORKING POSITION

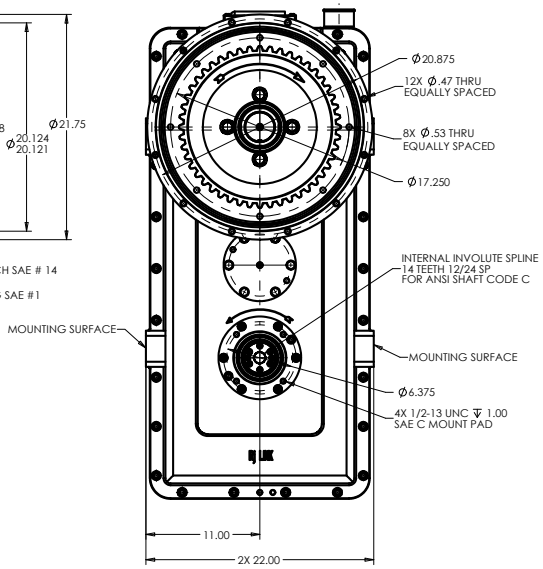

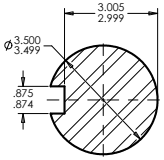

SECTION A-A
(ENLARGED)

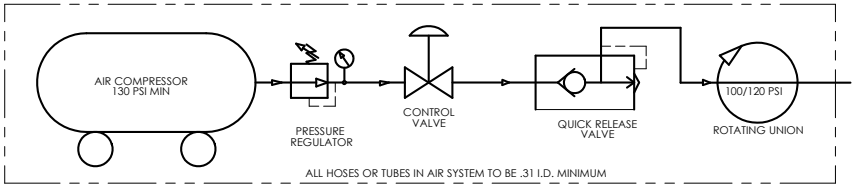

AIR ACTUATION SCHEMATIC

GEARBOX DATA:

-INPUT:
POWER: **650** HP
SPEED: **1800-2100** RPM.
-RATIO: **1.81:1** OUTPUT SHAFT
1.41:1 UPPER PUMP PAD.
-ROTATION: **ANTI- ENGINE**.
-LUBRICATION TYPE: **CIRCULATING COOLED OIL**. (OIL COOLER, PIPING, AND FITTINGS ARE FURBISHED BY CUSTOMER).
-LUBE SUMP CAPACITY: **6** GALLONS APPR.
-SURFACE FINISH: PER CUSTOMER REQUEST.
-APP. WEIGHT: **1320** lbs W/O OIL.
-CLUTCH ACTUATION: COMPRESSED CLEAN AND DRY AIR 100/120 PSI AT ROTARY UNION INLET. (COMPRESSOR, PRESSURE REGULATOR, CONTROL VALVE, QUICK RELEASE VALVE, HOSES, AND FITTINGS FURNISHED BY CUSTOMER).

RJ Link International, Inc.
Rockford, IL 61109, USA

THIRD ANGLE PROJECTION

This document is the property of RJ Link International, Inc. and is loaned to the recipient for their confidential use only. In consideration of the loan of this drawing, recipient promises and agrees that it shall not be used in any way detrimental to the interest of RJ Link International, Inc., that is shall be returned upon request, and it shall not be reproduced, copied, loaned or otherwise disposed of directly or indirectly without the expressed written consent of RJ Link International, Inc.

TORSIONAL VIBRATIONS EXIST IN ALL ROTATING SYSTEMS. IT IS THE SOLE RESPONSIBILITY OF THE EQUIPMENT MANUFACTURER OR ASSEMBLER TO INSURE THAT NO DAMAGING CRITICALS FALL IN THE OPERATING RANGE OF THE SYSTEM.

DESCRIPTION	REDUCTION GEARBOX		
DWG SIZE: D	DWG No.: D170A181002		
DRAWN: MMM	DATE: 10/03/2017		
CHECKED: JO	DATE: 10/03/2017	SCALE: 1:6	PART FILE
ENG APP: JO	DATE: 10/03/2017	SHEET 1 OF 1	REV: 01