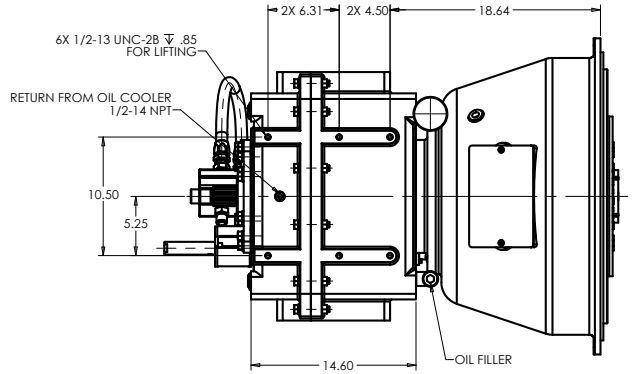

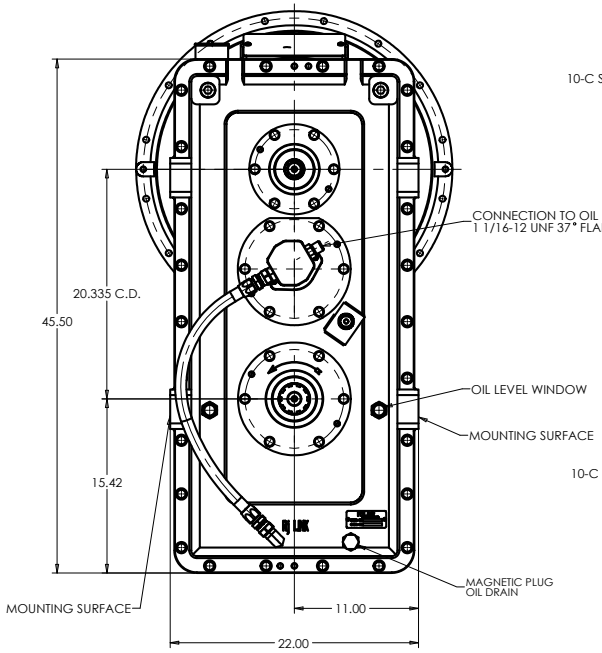

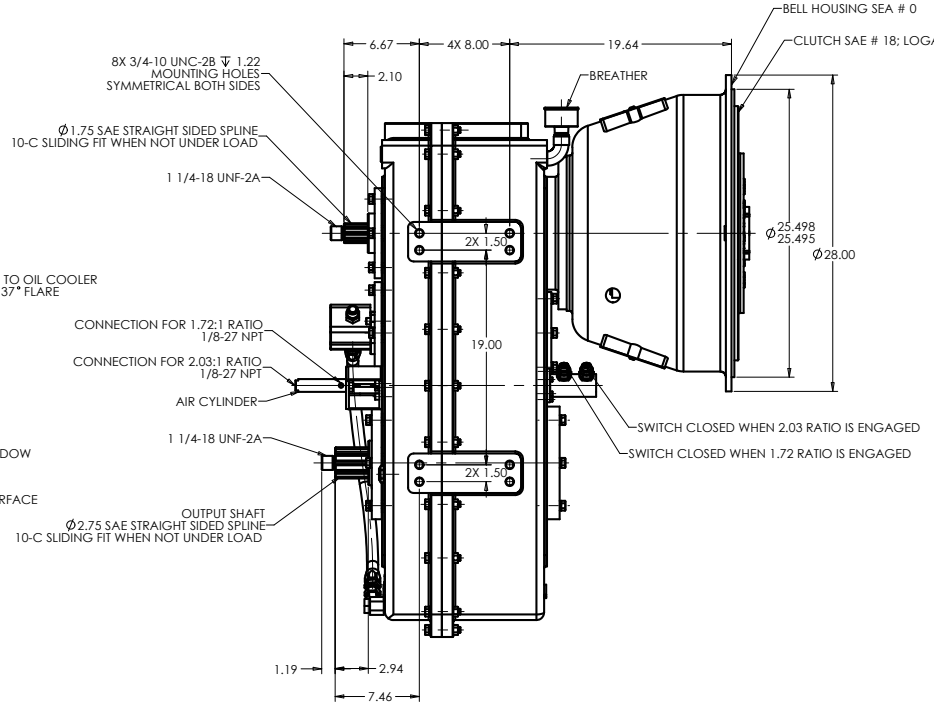

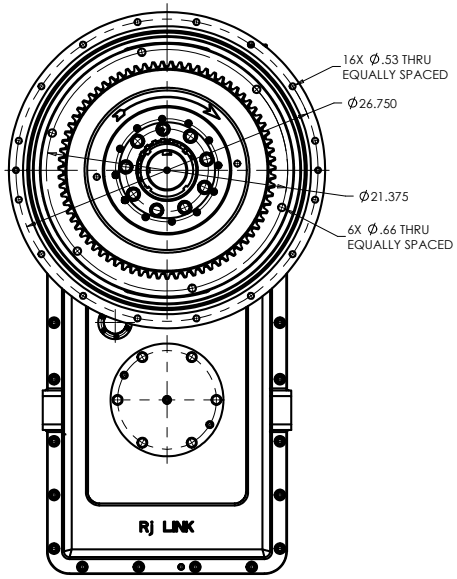

WORKING POSITION

GEARBOX DATA:

-INPUT CAPACITY: **600** HP
-INPUT SPEED: **2100** RPM MAX.
-RATIOS: **2.03:1** & **1.72:1**
-ROTATION: **ENGINE**.
-LUBRICATION TYPE: **CIRCULATING COOLED OIL**.
-LUBE CAPACITY: **10** GALLONS APPR.
-APPR WEIGHT: **1700** lbs W/O OIL.

RJ Link International, Inc.
Rockford, IL 61109, USA

THIRD ANGLE PROJECTION

This document is the property of RJ Link International, Inc. and is loaned to the recipient for their confidential use only. In consideration of the loan of this drawing, recipient promises and agrees that it shall not be used in any way detrimental to the interest of RJ Link International, Inc., that is shall be returned upon request, and it shall not be reproduced, copied, loaned or otherwise disposed of directly or indirectly without the expressed written consent of RJ Link International, Inc.

TORSIONAL VIBRATIONS EXIST IN ALL ROTATING SYSTEMS. IT IS THE SOLE RESPONSIBILITY OF THE EQUIPMENT MANUFACTURER OR ASSEMBLER TO INSURE THAT NO DAMAGING CRITICALS FALL IN THE OPERATING RANGE OF THE SYSTEM.

DESCRIPTION	TWO SPEED GEARBOX		
DWG SIZE	D	DWG No.	D240E203002
DRAWN	MMM	DATE	10/11/2017
CHECKED	JO	DATE	10/12/2017
ENG APP	JO	DATE	10/12/2017
SCALE	1:6	PART FILE	
SHEET 1 OF 1		REV	00